HILLCREST LODGE

&

JAPANESE GARDEN

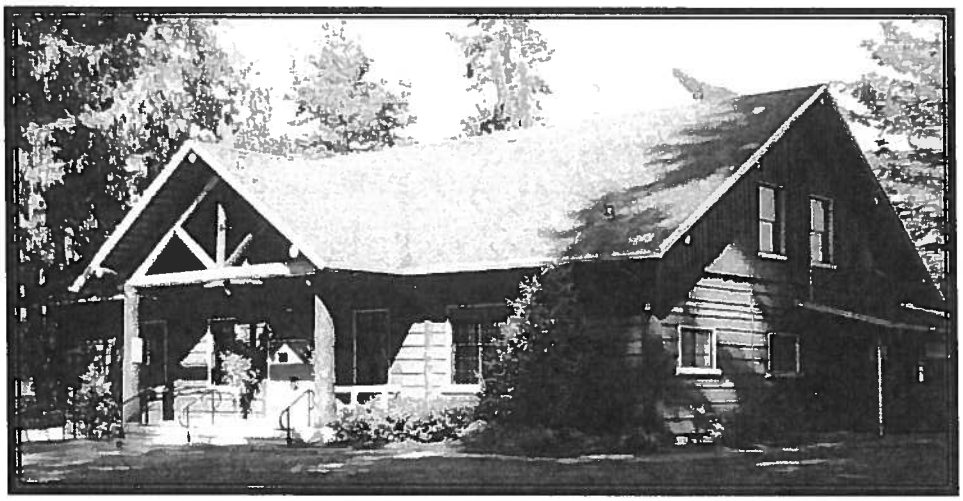

RENTAL INFORMATION

Mount Vernon Parks & Recreation
1717 South 13th Street
Mount Vernon, WA 98274
(360) 336-6215 / mvparks@mountvernonwa.gov
www.mountvernonwa.gov

HILLCREST LODGE RENTAL INFORMATION

A 3,142 square foot log cabin facility with a fireplace and a garden located at Hillcrest Park. This facility has a maximum capacity of 200 people. There are approximately 16 60"diameter round tables, 16 6-foot banquet style tables and approximately 145 chairs provided, as well as one 50-cup coffee maker. Fees are for the entire day beginning at 8 a.m. the morning of your rental and are effective until midnight.

DAMAGE DEPOSIT AND KEY CHECK-OUT

Damage Deposits must be paid no later than one week prior to your event date, during regular business hours Monday through Friday 8am to 5pm. **If your damage deposit is NOT paid prior to a weekend event, your rental fee will be forfeited and you will not be able to rent the lodge on the day of your scheduled event.** The Lodge Monitor and Weekend Supervisor will not accept damage deposit payments. Damage deposit must be paid before set-up and key pick up. If the damage deposit is paid less than 30 days prior to the event, only cash, money order or cashiers check will be accepted. There are NO exceptions to this rule. If user pays damage deposit 30 days or more prior to the event, then personal check will be accepted. We do not accept credit card payments for damage deposit payments. Please note that the rental fee and damage deposit must be made as two separate payments.

Keys are available in the Main Office at Hillcrest Park. Office hours are 8:00 a.m. - 5:00 p.m. Monday - Fridays. If your event is on a weekend or holiday, you MUST obtain the keys during regular business hours on the last business day prior to your event. Your damage deposit must be paid in order to receive keys for the lodge. Keys must be turned into the drop box or the Facility Supervisor at the completion of your event.

CHECK-IN PRIOR TO YOUR EVENT

For your convenience and safety, there is a staff person on duty during all rental events. For weekend events, Saturday and Sunday, **renters must call the number listed below** at the time of your arrival to conduct a pre-event room inspection prior to the start of a rental to ensure cleanliness of the facility. For rentals Monday - Friday, please check in at the Main Office at Hillcrest Park for pre-event inspection. Pre-event room inspections will not be conducted if rental groups have already begun their set-up and renters may be held responsible for any damages and/or messes.

Weekend Rentals (Saturday & Sunday): **Please call the Supervisor at 360-661-4186 upon arrival. Leave a message if there is no answer.**

CLEANING THE FACILITY

Renters are responsible for cleaning the room(s) in accordance with the supplemental "Hillcrest Lodge Rental Responsibilities." Rental groups are responsible for storing all tables and chairs back on the storage racks. All garbage is to be removed from the facility at the conclusion of your event... Cleaning equipment is available by contacting the staff person on duty. To ensure the return of the damage deposit, the staff person will complete a post-event inspection at the conclusion of the rental. Any cleaning and/or repairs that requires staff time and materials will be deducted from the damage deposit and/or charged to the rental group. If a rental group exceeds the time reserved which is no later than **12am (midnight)**, there will be charges for additional time and fees will be deducted from the damage deposit. Failure to follow the Hillcrest Lodge Rental Responsibilities may result in forfeiture of the damage deposit and/or additional charges and could also result in denial of future rental use.

REFUND OF DAMAGE DEPOSIT

Damage deposits are 100% refundable as long as the following conditions are met:

1. The rooms and adjacent facility (including outside) are left in a clean and orderly manner per the Hillcrest Lodge Rental Responsibilities.

2. Use of the room does not exceed the scheduled time (12am).

3. All equipment is accounted for and undamaged.

4. Additional staff time is not required to clean the facility. If the facility is left unclean a minimum charge for each staff person needed to clean the facility will apply.

5. Garbage is picked up and damage to the building, garden or parking lot areas has not occurred.

6. All rules/guidelines governing noise and alcohol consumption as stated in the alcohol information section are met.

7. All rules/guidelines governing rental usage of the Hillcrest Lodge are met.

If these conditions are not met to the satisfaction of the staff, an appropriate fee will be deducted from the damage deposit. If necessary, rental groups will be charged to cover any additional cost. Please allow two weeks for the damage deposit to be returned via U.S. mail.

DIRECTIONS TO HILLCREST PARK FROM I-5

Take exit 226 (Kincaid St.). When you come to the light, turn right (Northbound) or turn left (Southbound). Head up the hill to13th Street, and turn right on 13th Street. Follow 13th Street heading South for about 1/4 mile, Hillcrest Park will be on your right hand side.

The physical address for Hillcrest Park is:
1717 South 13th Street
Mount Vernon, WA 98274

HILLCREST LODGE RENTAL RESPONSIBILITIES

Your rental is from 8:00 a.m. to 12:00a.m. (midnight).
This mean the lodge must be cleaned & vacated no later than 12:00a.m.

All music must be turned off by 10:00 p.m. Friday and Saturday and 9:00pm the rest of the week (There are no exceptions to this rule).

1. The lodge and surrounding area (i.e., oriental garden, parking lot) must be cleaned and all items removed from the premises not later than 12:00a.m.

2. Pick up all garbage (extra bags located in kitchen drawer) from lodge and surrounding grounds (i.e., oriental garden, parking lot). Secure the bags and set outside kitchen by trash bins.

3. Wipe down tables and return them to the table racks.

4. Wipe down chairs and set up a row of chairs against the wall around the perimeter of the hardwood floor. Please do not put any folded chairs behind the chair rail.

5. Wipe down all kitchen surfaces (cleaning supplies located under sink).

6. Sweep and mop all floors (Facility Supervisor will explain proper mopping techniques and provide items needed to mop).

7. Check fireplace. Make sure the fire is put out, install wood cover, and close screen.

8. Turn down thermostat to 65 degrees.

9. Turn off all stoves and lights.

10. Close and lock all doors and windows.

11. Return all keys to drop box or return to the on duty Facility Supervisor.

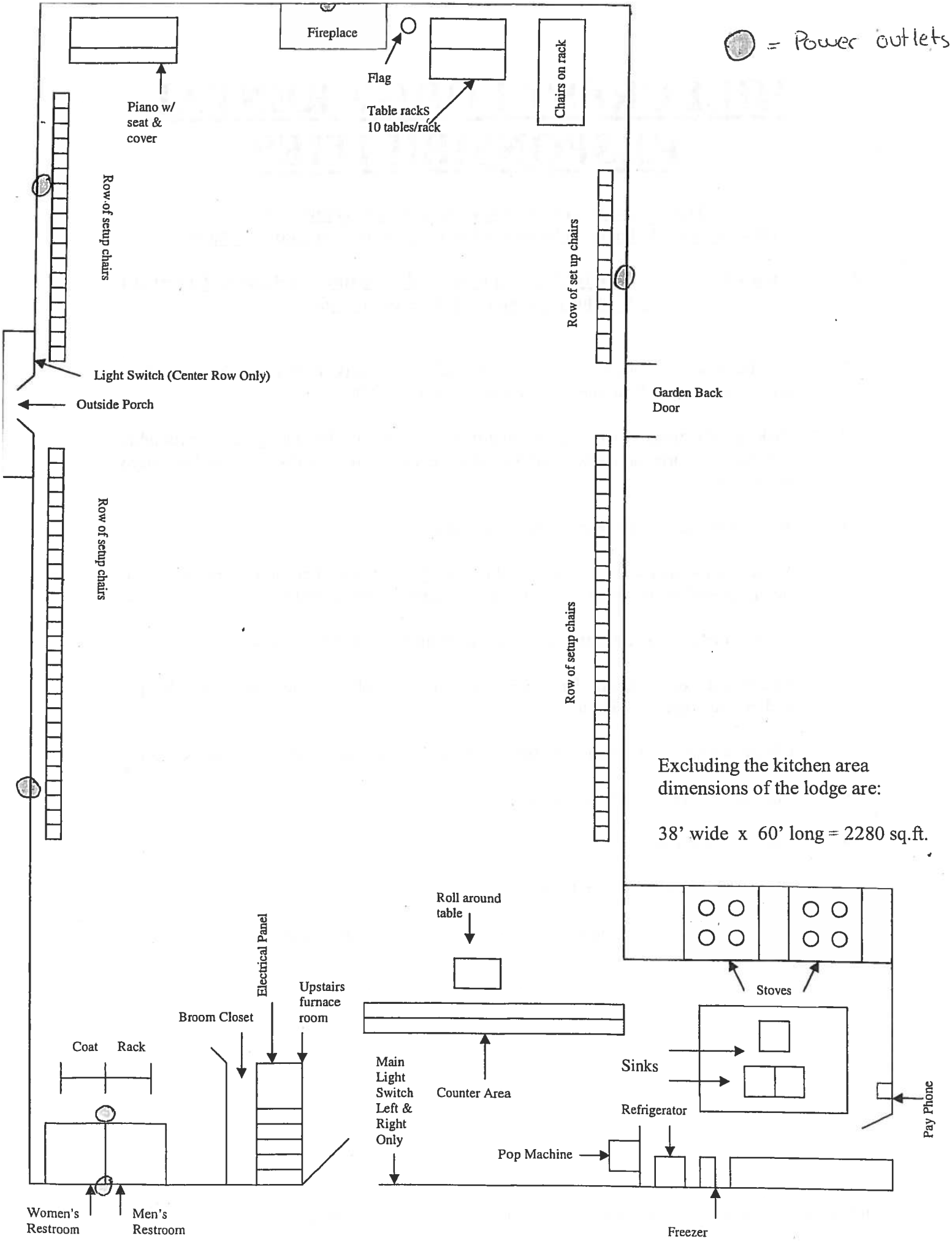
= Power outlets
Fireplace
Flag
Piano w/ seat & cover
Table racks 10 tables/rack
Chairs on rack
Row of setup chairs
Row of set up chairs
Light Switch (Center Row Only)
Outside Porch
Garden Back Door
Row of setup chairs
Row of setup chairs
Excluding the kitchen area dimensions of the lodge are:
38' wide x 60' long = 2280 sq.ft.
Roll around table
Electrical Panel
Upstairs furnace room
Broom Closet
Stoves
Coat Rack
Main Light Switch Left & Right Only
Counter Area
Sinks
Refrigerator
Pay Phone
Pop Machine
Women's Restroom
Men's Restroom
Freezer

MOUNT VERNON PARKS AND RECREATION CONTACTS

WEEKEND RENTALS(Saturday & Sunday): ***When you arrive at the lodge please call the Weekend Supervisor at (360)661-4186 to conduct a pre-event inspection. After event completion contact Lodge Monitor at (360)661-3400 to conduct post-event inspection.***

Monday – Friday 8:00 a.m. to 5:00 p.m.	Main Office:	336-6215
Monday & Tuesday after 5:00 p.m.	Steve Rutledge, Lodge Monitor	Cell – 661-4186
Wednesday - Friday after 5:00pm	Mike Cherry, Lodge Monitor	Cell-661-3400
Weekends & Holidays	Mike Cherry, Lodge Monitor (Evening)	Cell – 661-3400
	Steve Rutledge, Weekend/Holiday Supervisor (Morning)	Cell – 661-4186

EMERGENCIES ONLY: If you are unable to get a hold of anyone above and you have an emergency, please contact:

Parks Foreman	Cell – 333-3555
Operations Supervisor	Cell – 661-2030

In case of an emergency call # 911.

****Lodge is monitored by surveillance cameras****

Chapter 9.22

LIQUOR OFFENSES

Sections:

9.22.010 Public place defined – Exemptions.
9.22.020 Opening or consuming in a public place – Penalty.
9.22 030 Acting without license.
9.22.040 Sales of liquor by drink or bottle.
9.22.045 Statute violation – Adoption by reference.
9.22.050 Drinking in public conveyance – Penalty against carrier – Exception.
9.22.060 Drinking in public conveyance – Penalty against individual – Restricted application.
9.22.070 General penalties – Jurisdiction for violations – Adoption by reference.
9.22.080 Severability.

9.22.010 Public place defined – Exemptions.

A. As used in this chapter, "public place" includes streets and alleys of the city; state or county highways or roads; buildings and grounds used for school purposes; public dance halls and grounds adjacent thereto; those parts of establishments where alcohol may be sold under this title, soft drink establishments, public buildings, public meeting halls, lobbies, halls and dining rooms of hotels, restaurants, theaters, stores, garages and filling stations, which are open to and are generally used by the public and to which the public is permitted to have unrestricted access; stages, and other public conveyances of all kinds and character, and depots and waiting rooms used in conjunction therewith which are open to unrestricted use and access by the public; publicly owned bathing beaches, parks, and/or playgrounds; and all other places of like or similar nature to which the general public has unrestricted right of access, and which are generally used by the public.

B. It is the intent of the council that "public place" does not include Hillcrest Lodge or the gazebo associated therewith, or the Skylight Room at Hillcrest Park, or Sherman Anderson Field, or Edgewater Park, or Bakerview Park or streets and alleys of the city when closed by the city council for a specific event with an appropriate permit from the Washington State Liquor Control Board, when such facilities are leased, rented or assigned to private parties, groups or organizations which have obtained and complied with conditions set forth in a special events permit pursuant to Chapter 5.05 MVMC.

C. "Public place" as defined in this title shall not include (1) any of those parks under the control of the State Parks and Recreation Commission, nor, (2) parks and picnic areas adjacent to and held by the same ownership as licensed brewers and domestic wineries for the consumption of beer and wine produced by the respective brewery or winery, as prescribed by regulation adopted by the Washington State Liquor Control Board pursuant to Chapter 34.05 RCW. (Ord. 3206 § 1, 2004; Ord. 3177 § 3, 2004).

9.22.020 Opening or consuming in a public place – Penalty.

Except as permitted by RCW Title 66, as it now exists or as it may hereafter be amended, no person shall open a package containing liquor or consume liquor in a public place. Any person who violates any provision of this section shall have committed a civil infraction. Procedures for issuance of a notice of infraction and the processing thereof in the courts shall be as set forth in the Infraction Rules for Courts of Limited Jurisdiction as now or hereafter promulgated by the Washington State Supreme Court.

Penalties for violation shall be as follows:

A. Upon a first violation, a fine of $70.00;

B. Upon a second violation, a fine of $100.00;

C. Upon a third violation, a fine of $250.00. (Ord. 3177 § 3, 2004).

9.22 030 Acting without license.

Any person doing any act required to be licensed under RCW Title 66 without having in force a license issued to him or her shall be guilty of a gross misdemeanor. (Ord. 3177 § 3, 2004).

9.22.040 Sales of liquor by drink or bottle.

It is unlawful to sell any liquor, including wine or beer, by the drink or by the bottle in the city except as otherwise provided by RCW Title 66, and as amended. (Ord. 3177 § 3, 2004).

9.22.045 Statute violation – Adoption by reference.

Any person who keeps or possesses liquor, including wine or beer, on premises conducted or maintained by him or her as principal or agent, with intent to sell the same in violation of RCW Title 66 as presently constituted or hereinafter amended, is guilty of a violation of this chapter. (Ord. 3177 § 3, 2004).

9.22.050 Drinking in public conveyance – Penalty against carrier – Exception.

Every person engaged wholly or in part in the business of carrying passengers for hire, and every agent, servant, or employee of such person, who knowingly permits any person to drink any intoxicating liquor in any public conveyance, except in the compartment where such liquor is sold or served under the authority of a license lawfully issued, is guilty of a misdemeanor. This section does not apply to a public conveyance that is commercially chartered for group use or a for-hire vehicle licensed under city, county, or state law. (Ord. 3177 § 3, 2004).

9.22.060 Drinking in public conveyance – Penalty against individual – Restricted application.

Every person who drinks any intoxicating liquor in any public conveyance, except in a compartment or place where sold or served under the authority of a license lawfully issued, is guilty of a misdemeanor. With respect to a public conveyance that is commercially chartered for group use and with respect to a for-hire vehicle licensed under city, county, or state law, this section applies only to the driver of the vehicle. (Ord. 3177 § 3, 2004).

9.22.070 General penalties – Jurisdiction for violations – Adoption by reference.

Every person guilty of a violation of this chapter for which no penalty has been specifically provided shall be liable, on conviction, according to the following provision of the Revised Code of Washington as presently constituted or hereinafter amended and is adopted by reference: RCW 66.44.180. (Ord. 3177 § 3, 2004).

9.22.080 Severability.

If any section, subsection, sentence, clause, chapter, provision, or phrase of this chapter or its application to any person or circumstance is found to be unconstitutional or invalid by a court of competent jurisdiction, such decision shall not affect the validity of the remainder of the chapter or the application or the provisions to other persons or circumstances. (Ord. 3177 § 3, 2004).

Chapter 9.23

PRECURSOR DRUGS

Sections:

9.23.010 Ephedrine, pseudoephedrine, phenylpropanolamine – Sales restrictions – Penalty.
9.23.020 Unlawful possession of ephedrine, pseudoephedrine, or phenylpropanolamine.
9.23.030 Exemptions – Pediatric products – Products exempted by the State Board of Pharmacy.
9.23.040 Ephedrine, pseudoephedrine, phenylpropanolamine – Methods to prevent sales violations.
9.23.050 Severability.

9.23.010 Ephedrine, pseudoephedrine, phenylpropanolamine – Sales restrictions – Penalty.

A. It is unlawful for a pharmacy licensed by, or shopkeeper or itinerant vendor registered with, the Department of Health under Chapter 18.64 RCW, or an employee thereof, knowingly to sell, transfer, or to otherwise furnish, in a single transaction:

1. More than three packages of one or more products that he or she knows to contain ephedrine, pseudoephedrine, or phenylpropanolamine, their salts, isomers, or salts of isomers; or

2. A single package of any product that he or she knows to contain more than three grams of ephedrine, pseudoephedrine, or phenylpropanolamine, their salts, isomers, or salts of isomers, or a combination of any of these substances.

B. It is unlawful for a person who is not a manufacturer, wholesaler, pharmacy, practitioner, shopkeeper, or itinerant vendor licensed by or registered with the Department of Health under Chapter 18.64 RCW to purchase or acquire, in any 24-hour period, more than the quantities of the substances specified in subsection A of this section.

C. A violation of this section is a gross misdemeanor. (Ord. 3177 § 6, 2004).

9.23.020 Unlawful possession of ephedrine, pseudoephedrine, or phenylpropanolamine.

A. Any person who possesses more than 15 grams of ephedrine, pseudoephedrine, or phenylpropanolamine, their salts, isomers, or salts of isomers, or a combination of any of those substances, is guilty of a gross misdemeanor.

Chapter 9.28

NOISE REGULATIONS

Sections:

9.28.010 Declaration of policy.
9.28.020 Findings.
9.28.030 Definitions.
9.28.040 Enforcement authority.
9.28.050 Designation of EDNAs.
9.28.060 Environmental sound levels – Quantitative standards.
9.28.070 Public disturbance noise.
9.28.080 Compression brakes.
9.28.090 Violation – Penalty.
9.28.100 Purpose – Liability.

9.28.010 Declaration of policy.

It is the policy of the city to minimize the exposure of citizens to physiological and psychological dangers of excessive noise and to protect, promote and preserve the public health, safety and general welfare. It is the express intent of the city council to control the level of noise in a manner which promotes the use, value and enjoyment of property, sleep and repose, commerce and the quality of the environment. (Ord. 3349 § 1, 2007).

9.28.020 Findings.

Pursuant to RCW 70.107.060, the city council finds that the regulations set forth in this chapter are made necessary by local conditions. The problem of noise in Mount Vernon has been studied and it is documented by the complaints received and logged in the Mount Vernon police department, and by complaints recorded and noted at public meetings. The council therefore finds that special conditions exist which make necessary any and all differences between this chapter and the regulations adopted by the Washington State Department of Ecology. (Ord. 3349 § 1, 2007).

9.28.030 Definitions.

For purposes of implementation and enforcement of this chapter, the following terms shall have the assigned meanings:

A. "dBA" means the sound pressure level in decibels measured using the "A" weighting network on a sound level meter. The sound pressure level, in decibels, of a sound is 20 times the logarithm to the base 10 of the ratio of the pressure of the sound to a reference pressure of 20 micropascals.

B. "EDNA" means the environmental designation for noise abatement, being an area or zone (environment) within which maximum permissible noise levels are established. For purposes of this definition, MVMC 9.28.050, identifying and describing the classes of EDNAs, shall be recognized as designating EDNAs to conform to the city's zoning ordinance. In areas not covered by a local zoning ordinance, WAC 173-60-030(1), identifying and describing the classes of EDNAs recognized by the state Department, shall be adopted by reference.

C. "Noise" means the intensity, duration and character of sounds, from any and all sources.

D. "Property boundary" means the surveyed line at ground surface, which separates the real property owned, rented, or leased by one or more persons, from that owned, rented, or leased by one or more other persons, and its vertical extension.

E. "Receiving property" means real property within which the maximum permissible noise levels specified within this chapter shall not be exceeded from sources outside such property.

F. "Sound level meter" means a device which measures sound pressure levels and conforms to Type I, S1A, Type II or S2A, as specified in the American National Standards Institute Specification Section 1.4 (1971) as now exists or as hereafter amended or modified. (Ord. 3349 § 1, 2007).

9.28.040 Enforcement authority.

The city's community and economic development department along with the city attorney's office and the city's police department shall enforce this chapter and shall be responsible for the issuance of any notice, citation, or complaint. (Ord. 3349 § 1, 2007).

9.28.050 Designation of EDNAs.

Pursuant to the authority of Chapter 70.107 RCW and WAC 173-60-030(2), the city council designates all residentially zoned property within the boundaries of the city limits to be EDNA Class A (residential). EDNA Class A zones shall include zones designated as R-A, R-1, R-2, R-3, R-4, R-0, P, HD, P-O, and MHP. The council further designates all commercially zoned property within the boundaries of the city limits to be EDNA Class B (commercial). EDNA Class B zones shall include zones designated as LC, C-1, C-2, C-3, and C-4. The council further designates all industrially zoned property within the boundaries of the city limits to be EDNA Class C (industrial). EDNA Class C zones shall include zones designated as M-1 and M-2. (Ord. 3349 § 1, 2007).

9.28.060 Environmental sound levels – Quantitative standards.

A. It is unlawful for any person to cause noise, or for any person in possession of property to permit noise originating from such property to intrude into the real property of another person, which such noise exceeds the maximum permissible noise levels established by this chapter, with the point of measurement being at the property boundary of the receiving property or anywhere within. The noise limitations established are set forth in the following table after any applicable adjustments provided for in this chapter are applied:

	EDNA of Receiving Property		
EDNA of Noise Source	Class A	Class B	Class C
Class A	55 dBA	57 dBA	60 dBA
Class B	57 dBA	60 dBA	65 dBA
Class C	60 dBA	65 dBA	70 dBA

B. Deviations. The following deviations from the maximum permissible noise levels are permitted:

1. Between the hours of 10:00 p.m. and 7:00 a.m. the noise limitations of the foregoing table shall be reduced by 10 dBA for receiving property within Class A EDNAs.

2. At any hour of the day or night the applicable noise limitations in subsections A and B of this section may be exceeded for any receiving property by no more than:

a. Five dBA for a total of 15 minutes in any one-hour period; or

b. Ten dBA for a total of five minutes in any one-hour period; or

c. Fifteen dBA for a total of one and one-half minutes in any one-hour period.

C. If the measurements of sound are made with a sound level meter, the instrument shall be in good operating condition and shall meet the requirements for a Type I, S1A, Type II or S2A instrument, as described in American National Standards Institute Specifications as now exist or as hereafter amended or modified. If the measurements are made with other instruments, or assemblages of instruments, the procedure must be carried out in such a manner that the overall accuracy shall be at least that called for in the National Standards Institute specifications.

D. Exemptions. The following shall be exempt from the provisions of subsection A of this section between the hours of 7:00 a.m. and 10:00 p.m.:

1. Sounds originating from residential property relating to temporary projects for the maintenance or repair of homes, grounds and appurtenances.

2. Sounds created by the discharge of firearms on authorized shooting ranges.

3. Sounds created by blasting.

4. Sounds created by aircraft engine testing and maintenance not related to flight operations; provided, that aircraft testing and maintenance shall be conducted at remote sites whenever possible.

5. Sounds created by the installation or repair of essential utility services.

E. Nighttime Exemption. The following shall be exempt from the provisions of subsection (B)(1) of this section:

1. Noise from electrical substations and existing stationary equipment used in the conveyance of water, wastewater, and natural gas by a utility.

2. Noise from existing industrial installations which exceeds the standards contained in these regulations and which, over the previous three years, have consistently operated in excess of 15 hours per day as a consequence of process necessity and/or demonstrated routine normal operation. Changes in working hours, which would affect exemptions under this regulation, require approval of the director of the community and economic development department.

F. Exemptions Other Than Residential. The following shall be exempt from the provisions of subsection A of this section, except insofar as such provisions relate to the reception of noise within Class A EDNAs between the hours of 10:00 p.m. and 7:00 a.m.:

1. Sounds originating from temporary construction sites as a result of construction activity.

2. Sounds originating from forest harvesting and silvicultural activity.

G. Other Exemptions. The following shall be exempt from all provisions of subsection A of this section:

1. Sounds originating from aircraft in flight and sounds that originate at airports which are directly related to flight operations;

2. Sounds created by surface carriers engaged in interstate commerce by railroad;

3. Sounds created by warning devices not operating continuously for more than five minutes, or bells, chimes, and carillons;

4. Sounds created by safety and protective devices where noise suppression would defeat the intent of the device or is not economically feasible;

5. Sounds created by emergency equipment and work necessary in the interests of law enforcement or for the health, safety or welfare of the community;

6. Sounds originating from motor vehicle racing events at existing authorized facilities;

7. Sounds originating from officially sanctioned parades and other public events;

8. Sounds emitted from petroleum refinery boilers during startup of said boilers; provided, that the startup operation is performed during daytime hours whenever possible;

9. Sounds created by the discharge of firearms in the course of hunting;

10. Sounds caused by natural phenomena and unamplified human voices;

11. Sounds created by motor vehicles, licensed or unlicensed, when operated off public highways, except when such sounds are received in Class A EDNAs;

12. Sounds originating from existing natural gas transmission and distribution facilities.

H. The standards provided in this chapter represent the minimum protections for citizens from noises which are deemed appropriate. The city is aware of technologies and techniques which would reduce the impact of noise on citizens even further, but has chosen not to require them due to the impact on existing commercial and industrial uses. The fact that a new commercial or industrial use will meet the requirements of this code does not preclude other steps for noise abatement being required by the city when considering conditional use permits and making SEPA determinations. Nothing in these exemptions is intended to preclude the director of community and economic development from requiring installation of the best available noise abatement technology consistent with economic feasibility. (Ord. 3349 § 1, 2007).

9.28.070 Public disturbance noise.

It is unlawful for any person to cause, or for any person in possession or control of property to allow to originate from the property, sound that is a public disturbance noise. The following sounds or acts are determined to be public disturbance noises or acts producing public disturbance noises:

A. It is unlawful for any person to operate, or for any owner to permit any person to operate, any motor vehicle upon the public highways or easement roads which is not equipped with a muffler in good working order, in constant operation, and which meets the requirements established by RCW 46.37.390 as it now exists or as may hereafter be amended;

B. Operation of a motor vehicle in such a manner as to intentionally cause, or allow to be emitted, squealing, screeching, or other such sound from the tires in contact with the ground because of rapid acceleration, intentional and unnecessary braking or excessive speed around corners or other such reason; provided, that sound resulting from emergency braking or emergency evasive action to avoid imminent danger shall not be considered a public disturbance noise;

C. Operation off of any improved public highway, street or alley of any motorcycle, or any motor vehicle intended for off-road use, or any motor vehicle not licensed for use on public highways, where the noise therefrom is audible in or on any residential property and unreasonably disturbs or annoys others so as to interfere with the peace and comfort of persons in residential districts;

D. The frequent, repetitive or continuous sounding of any horn, siren, or alarm attached to a motor vehicle, except as a warning of danger or as specifically permitted or required by law;

E. Using or operating any mechanical or electronic device or loudspeaker in a fixed or movable position exterior to any building, or mounted upon a motor vehicle, aircraft, or boat for commercial or business advertising purposes or for the purpose of attracting attention to any performance, show or sale or display of merchandise, where the sound therefrom may be heard upon any public street, park, or place; provided, that nothing in this chapter is intended to prohibit incidental sounds emanating from a sporting or entertainment or public event; provided further, that ice cream or vegetable vendors whose sole method of selling is from a moving vehicle shall be exempt from this provision from the hours of 7:00 a.m. to 8:00 p.m. so long as the level of noise is not unreasonably loud;

F. Owning, keeping, possessing or harboring any animals which by frequent or habitual howling, barking, crowing or other noise-making can be heard in a residential zone except R-A zones; provided, that nothing in this chapter shall be construed to limit the applicability of Chapter 6.04 MVMC;

G. The erection, including excavation, demolition, alteration or repair, of any building other than between the hours of 7:00 a.m. to 10:00 p.m. except in case of urgent necessity in the interest of public safety and convenience, and then only by written permission of the building official or city engineer;

H. Sound from motor vehicle sound systems, such as tape players, radios, and compact disc play-

ers, operated at a volume so as to be audible greater than 50 feet from the vehicle itself;

I. The use, operation or permitting to be used, played or operated any radio receiving set, musical instrument, phonograph, or other machine or device for the producing or reproducing of sound, and including portable audio equipment such as those devices commonly known as "boom boxes," in such a manner as to unreasonably disturb the peace, quiet and comfort of the neighboring inhabitants or at any time with louder volume than is necessary for convenient hearing for the person or persons who are in the room or chamber in which such machine or device is operated and who are voluntary listeners thereto. To unreasonably disturb the peace, quiet and comfort of the neighboring inhabitants shall include, but not be limited to, the operation of any such set, instrument, phonograph, machine or device in such a manner as to be audible at a distance of 50 feet from the building or structure in which it is located or which is audible in any other structure or building when the doors and windows of such other building or structure are closed; provided, however, that nothing herein shall prohibit such sounds at or from a wedding, reception, party, musical or theatrical performance or other similar event where a permit therefor has first been obtained from the director of the parks department, and subject to such conditions and restrictions as the parks director shall designate. This shall not apply to regularly scheduled events at parks or schools, such as public address systems for baseball or football games or park concerts between the hours of 9:00 a.m. and 10:00 p.m.;

J. Operation of any power lawn mower, power snow remover or blower, chainsaw or other powered equipment used in temporary or periodic maintenance or repair of residential property or grounds, except between the hours of 7:00 a.m. to 10:00 p.m. on weekdays and 8:00 a.m. to 9:00 p.m. on weekends;

K. The operation of any aircraft for the purpose of take-off or landing where the noise therefrom is audible in or on any residential property, whether or not such aircraft is regulated by the Federal Aviation Administration or other federal law, and including those aircraft commonly referred to as "ultralights";

L. The making of any sound or speaking or crying of any words with the unamplified human voice which is audible at a distance of 50 feet or which can be heard in any structure or building when the doors and windows are closed. (Ord. 3349 § 1, 2007).

9.28.080 Compression brakes.

A. Except as provided in this chapter, no person shall use motor vehicle compression brakes within the corporate limits of the city of Mount Vernon. It shall be an affirmative defense to prosecution under this section that compression brakes were applied in an emergency to protect persons or property.

B. As used in this chapter, the term "compression brakes" means a device which, when manually activated, retards the forward motion of motor vehicle by the compression of the engine of the vehicle or any unit or part of the engine. "Compression brakes" are also referred to as "jake brakes." (Ord. 3349 § 1, 2007).

9.28.090 Violation – Penalty.

A. Violations – Unlawful. The violation or failure to comply with any of the provisions of this chapter is declared to be unlawful.

B. Civil Noise Infraction. Any violation of the provisions of MVMC 9.28.070 or 9.28.080 is a civil noise infraction for which a monetary penalty may be assessed as follows:

1. Upon a first violation, a fine of $100.00;
2. Upon a second separate subsequent offense by the same violator within a one-year period of time, a fine of $200.00;
3. Upon a third separate subsequent offense by the same violator within a one-year period of time, a fine of $300.00.

The procedure for issuance of a notice of infraction and the processing thereof in the courts shall be substantially as set forth for traffic infractions pursuant to the infraction rules for courts of limited jurisdiction (IRLJ) as now or hereafter promulgated by the Washington State Supreme Court and Chapter 7.80 RCW.

C. Criminal Violations. Any violation of the provisions of MVMC 9.28.060 in addition to any other penalty provided in this chapter or by law is guilty of a misdemeanor and, upon conviction thereof, shall be punished by a fine of not more than $1,000 or by imprisonment for not more than 30 days, or by both. (Ord. 3349 § 1, 2007).

9.28.100 Purpose – Liability.

A. It is expressly the purpose of this chapter to provide for and promote the health, safety, and welfare of the general public, and not to create or otherwise establish or designate any particular class or group of persons who will or should be especially protected or benefited by the terms of this chapter.

B. Nothing contained in this chapter is intended to be nor shall be construed to create or form the basis for any liability on the part of the city, its officers, employees or agents for any injury or damage resulting from the failure of anyone to comply with the provisions of this chapter, or by reason or in consequence of any inspection, notice, order, certificate, permission or approval authorized or issued or done in connection with the implementation of enforcement pursuant to this chapter, or by reason of any action or inaction on the part of the city related in any manner to the enforcement of this chapter by its officers, employees or agents. (Ord. 3349 § 1, 2007).

Chapter 9.29

TRAINS

Sections:

9.29.010 Obstructing or delaying a train.

9.29.010 Obstructing or delaying a train.[1]

Every person who shall willfully obstruct, hinder or delay the passage of any car lawfully operated upon any railway shall be guilty of a misdemeanor. (Ord. 2881 § 8, 1998).

1. See RCW 81.48.020.

MOUNT VERNON PARKS AND RECREATION
DAMAGE DEPOSIT CHECKLIST
HILLCREST PARK LODGE

	Condition In	Condition out
1. Facility swept and entry rugs shaken out		
2. Tables and chairs cleaned and put away on rack, with remainder lining perimiter of dance floor.		
3. Fire place cleaned, if used.		
4. Garbage dumped from kitchen and main hall.		
5. Kitchen area cleaned and mopped.		
6. Refrigerator and freezer checked and items removed.		
7. Restrooms cleaned and mopped - Men's and Women's		
8. Outdoor area: garden, plants and pond clean and damage free.		
9. Hardwood Floor swept and mopped.		
10. Parking lot cleaned.		
11. Litter in surrounding area picked up.		
12. Piano cover replaced and locked.	N/A	
13. All windows and doors locked.	N/A	
14. Lights turned off.	N/A	
15. Heat turned down to 60 degrees.	N/A	
16. Damages or breakages to report? (describe below)		
17. Were the police contacted for any reason? (explain below)	N/A	
18. **Kitchen Cheklist:** Coffee Pot, Griddle Spatula, Griddle Scraper, Utensil Holder		

Renter Signature at check-in: _____ Date: _____

Notes upon check-in:_____

_____

_____

Renter Signature at check-out: _____ Date: _____

Notes upon check-out:_____

_____

_____

Administrative use only:

Renter: _____ Date_____ Contract # _____ Damage _____

Group time in: _____ Group time out: _____ Monitor time in:_____ Monitor time out: _____

Monitor Signature: _____ Date: _____

Table Count:_____ Chair Count: _____

Washington Cities Insurance Authority
Tenant User Liability Insurance Program

Instructions for obtaining a quote and/or insurance are as follows:

1. Access the site at www.onebeaconentertainment.com
2. Go under ***Tulip Event Insurance*** and click on ***Purchase or Quote***.
3. For the Venue ID Code for Hillcrest Lodge enter **0465-101**. For the Venue ID Code for the Bakerview Park Vaux Retreat Center enter **0465-099**.
4. Answer the questions about the event.
5. Click on Quick Quote for the cost of insurance.
6. If you elect to purchase the insurance fill in contact information. The transaction is completed with a credit card on-line.
7. After credit card approval, an insurance certificate will automatically be emailed to Mount Vernon Parks and Recreation.

Access to the program is only available on-line and payment must be by VISA or MasterCard.

Other Insurance:
If you choose to go through another company to try and purchase insurance for your event, the following must be included:

1) **City of Mount Vernon, 809 Cleveland, Mount Vernon WA 98273** must be listed as an additional insured.
2) General Aggregate - $2,000,000
3) Each Occurrence- $1,000,000
4) Host Liquor or Liquor Liability coverage
5) The Parks Department must have a copy of the insurance certificate showing these requirements, as well as a **copy of the endorsement for the certificate**.

The Mount Vernon Parks and Recreation Department must have a copy of the insurance certificate and endorsement no later than one week prior to your rental for any events including alcohol. Failure to provide proper insurance documentation at least one week prior to your event may result in forfeiture of your rental.

Insurance is required for any event including alcohol. In addition, if there is alcohol at the event you are also required to have a banquet permit which can be purchased online at http://liq.wa.gov , which will need to be posted in the lodge during your event.

Alliant
DRIVER SPECIALTY GROUP

SPECIAL EVENT LIABILITY INSURANCE
SUMMARY OF INSURANCE

INSURED: Participating Public Entities and their tenant users, of the Alliant Insurance Services, Inc. Special Event Liability Program

MAILING ADDRESS: c/o Alliant Insurance Service, Inc.
Special Event
PO Box 6450
Newport Beach, CA 92658

POLICY TERM: January 1, 2007 to January 1, 2008

CARRIER: Evanston Insurance Company

A.M. BEST RATING: A Excellent, Financial Size Category XII (! Billion to 1.25 billion)

LIMITS:

$2,000,000	General Aggregate
$1,000,000	Products/Completed Operations Aggregate (Food Products Only)
$1,000,000	Personal and Advertising Injury
$1,000,000	Each Occurrence
$ 50,000	Fire Damage
$ 5,000	Medical Expense

All aggregates apply separately to each event

COVERAGE: Combined Single Limit of Liability for Bodily Injury and Property Damage Per Occurrence and Aggregate as shown above. Coverage includes:

- Lessees, Instructors or Event Holder as Named Insured
- "Primary & Non Contributory" wording as respects the Public Entity
- Volunteer Employee's as insureds
- Entity or Venue Owner as Additional Insured
- Premises and Products/Completed Operations Liability
- Personal and Advertising Injury
- Fire Damage and Medical Payments

OPTIONAL COVERAGE: (Subject to additional Premium/Conditions

- Liquor Liability (With prior approval and payment of additional premium)
- Athletic Participants included with underwriter's approval and signed waiver
- Vendors, Exhibitors and Concessionaires (Included with payment of additional premium)

MAJOR EXCLUSIONS: (Including but not limited to)

- Automobile Liability
- Property Damage to Entity Premises, or Property of Others in the Care, Custody and Control of the Insured
- Asbestos
- Workers' Compensation
- Collapse of Tents and Concert Limitations
- Performer and Crew with No Coverage for Injury to or by Performer or Crew
- Assault and Battery
- Terrorism
- Toxic Mold
- Punitive Damages

EXCLUDED EVENTS:

- Circus and Carnivals
- Mechanical Amusement Devices
- Motorized Sporting Events
- Tractor/Truck Pulls
- Boxing, Wrestling, Hockey, Contact Karate and Professional Sporting Events (Without prior underwriter approval)
- Aircraft and Balloon Events
- Pyrotechnical Uses and Fireworks Shows (Does not apply to spectators)
- Heavy Metal Concerts and Alternative Music Concerts Without prior underwriter approval)
- Moonbounces and Trampolines
- Hip-Hop Concerts and Rap Concerts (Without prior underwriter approval)
- Veterinary Legal Liability
- Rodeos and Roping Events (Including Practice without prior underwriter approval)

DEDUCTIBLE: None

REPORTING: Reporting Form and Certificates of Insurance to be submitted on a Quarterly basis, together with premium payment

HAZARD SCHEDULES/RATES: See Following

BROKER: **ALLIANT INSURANCE SERVICES, INC.**
NEWPORT BEACH, CA

Rennetta Poncy, Vice President
Mary Ellen Ewert, Unit Manager
Patricia Guisler, Assistant Account Representative

THIS PROPOSAL IS FOR INFORMATION PURPOSES ONLY AND DOES NOT AMEND, EXTEND OR ALTER THE POLICY IN ANY WAY. PLEASE REFER TO THE POLICY FORM FOR COMPLETE COVERAGE AND EXCLUSION INFORMATION.

Commissions are customarily paid by the insurance carriers to their agents and to brokers as a percentage of premiums. In addition to the commissions that Alliant Insurance Services, Inc. receives, its related entity, Alliant Underwriting Services (AUS) may receive compensation from Alliant Insurance and/or the carrier for providing underwriting services. The financial impact of the compensation received by AUS is a cost included in the premium. Additionally, the related entities of Alliant Business Services (ABS) and/or Strategic HR may receive compensation from Alliant Insurance and/or the carrier for providing designated, value-added services. Services contracted for by the client directly will be invoiced accordingly. Otherwise, services will be provided at the expense of Alliant Insurance and/or the carrier. Except as specifically directed by the client, AIS and its affiliates may also receive income as a result of a contingent income agreement with insurance carriers. Further information is available upon written request directed to: Alliant Insurance Services, Attention: Chief Operating Officer, 1301 Dove Street, Suite 200, Newport Beach, CA 92660.

Analyzing insurers' over-all performance and financial strength is a task that requires specialized skills and in-depth technical understanding of all aspects of insurance company finances and operations.

Insurance brokerages such as Alliant Insurance typically rely upon rating agencies for this type of market analysis. Both A.M. Best and Standard and Poors have been industry leaders in this area for many decades, utilizing a combination of quantitative and qualitative analysis of the information available in formulating their ratings.

A.M. Best has an extensive database of nearly 6,000 Life/Health, Property Casualty and International companies. You can visit them at www.ambest.com

For additional information regarding insurer financial strength ratings visit Standard and Poor's website at www.standardandpoors.com

To learn more about companies doing business in California, visit the California Department of Insurance website at www.insurance.ca.gov

INSTRUCTIONS FOR HILLCREST LODGE KITCHEN EQUIPMENT

Convection Oven:

1) Place power switch in the "ON" position.
2) Turn the thermostat to the desired temperature.
3) For a complete shutdown, place the thermostat and the power switch in the "OFF" positions.

Tips for use of Convection Oven:

1) In general, reduce temperature 50 degrees from conventional recipe.
   a) Bakery products, reduce temperature 50 degrees. Time 25 to 33% less.
   b) Casserole cooking, reduce temperature about 50 degrees. Time 25 to 50% less.
   c) Meat roasting, reduce temperature to 275 to 300 degrees. Use meat thermometer. Cooking time may be reduced up to 50%.
2) Use fan for preheating and baking.
3) Check product at ½ stated time of regular recipe.
4) Level pans bake more evenly; warped pans will give uneven baking results.

NOTE: *The door is on a connected hinge, you only need to pull on the one door handle and both doors will open and close together.*

Griddle:

1) The pilot light should be lit. You can check by looking for the flame through the holes next to the igniter button.
   If the pilot light is not lit:
   a) Make sure the individual valve is in the off position.
   b) Use the igniter button to ignite the pilot light by repeatedly pushing in ignition button until ignited.
2) Once you see the pilot light is lit you may then set the thermostat to the desired cooking temperature
3) To shut down turn individual on-off valve to off position.
4) After each use clean griddle thoroughly with a grill scraper or spatula and/or a warm wet rag. Please use care not to dent, scratch or gouge the plate surface. Do not use any dish soap or any cleaning solvents on the griddle.

NOTE: *If you do not have a pilot flame established fairly quickly and begin to smell gas, shut off the main valve and wait five minutes to let the gas build up escape.*

Only once the pilot flame has been established should you turn on the burner control. When the burner control is on it allows gas to flow to the burner. If there is no pilot flame it will allow gas to build up and cause possible delayed ignition, which could result in an explosion.

Sanitizing Dishwasher:

NOTE: This is strictly a sanitizing dishwasher. It is meant only to sanitize dishes. Dishes must be completely clean when they go into the dishwasher.

1) Scrape and rinse dishes thoroughly before loading machine.
2) Load machine and shut the door.
3) Move the on/off rocker switch to the "ON" position.
4) Move the fill/start rocker switch to the "START" position. The machine will automatically begin its start cycle. The green running light on the switch will illuminate while an operational cycle is in process.
5) At the end of the cycle drain the machine by holding the drain rocker switch in the "DRAIN" position until the machine is completely drained. To avoid running the pump dry, do not hold the drain rocker switch in the "DRAIN" position any longer than necessary.
6) Turn the on/off rocker switch to the "OFF" position.

Coffee Urn:

To Make Coffee:

1) To remove the lid, turn counterclockwise until the locking tabs completely clear the handles on each side of the body; then lift up. Take out the basket and pump tube with spring. For best results, always fill with cold fresh tap water to the level indicator mark inside the body for the number of ups desired. DO NOT OVERFILL THE COFFEE URN.
2) Wet the basket (this helps to keep small particles of coffee grinds from sifting through). Use a standard dry measure cup and tablespoon to add regular or percolator grind coffee to the basket. The chart below suggests the amount of coffee for regular brew:

WATER LEVEL	AMOUNT OF GROUND COFFEE
20 cups (100 oz.)	1 ½ - 2 cups
40 cups (200 oz.)	3 - 3 ½ cups
60 cups (300 oz.)	4 – 4 ½ cups
80 cups (400 oz.)	5 ¼ - 5 ¾ cups
100 cups (500 oz.)	6 ½ - 7 cups

3) Make sure the spring is on the pump tube; then place the basket on the pump tube. Then, holding the top of the pump tube, lower it into the coffee urn until the bottom of the pump tube is properly seated in the heat well in the center (if not, the coffee urn may not percolate).
4) Place the lid on the urn so that the locking tabs are at the front and back of the coffee urn.

5) Turn the lid clockwise until the locking tabs are fully engaged inside the handles on both sides of the coffee urn. Never plug in the coffee urn without the lid in place and the locking tabs fully engaged inside the handles.
6) Plug the coffee urn into the outlet, the ON light will illuminate red and coffee brewing will begin within seconds. The urn will begin to percolate within 8 minutes.

NOTE: DO NOT PLUG IN COFFEE URN WHEN THERE IS NO WATER INSIDE.

7) When the brewing cycle is complete, percolation stops and the READY light illuminates green to indicate the coffee is ready to serve. The coffee urn automatically switches to Keep Warm cycle and will maintain fresh, hot coffee until it is unplugged.

WARNING: BURN HAZARD! THE LID AND OTHER PARTS OF THE URN WILL BE HOT. USE A POT HOLDER OR OVEN MITT TO REMOVE THE LID.

8) Disconnect plug from wall outlet and allow the coffee urn to cool before washing.

NOTES:

- The urn will begin to percolate within 8 minutes.
- To make additional coffee, rinse the coffee urn and parts with cold water and repeat steps 1 through 7.
- To reheat coffee, remove the basket and pump tube. Lock the lid in place and plug in the unit for 20 to 60 minutes, depending on the amount of coffee remaining. Do not reheat if less than 20 cusp are left in the coffee urn.

<u>How to Clean:</u>

WARNING: Electrical Shock Hazard. Do not immerse urn, cord or plug in water or other liquid.

1) After each use and before washing, unplug power cord from wall outlet and allow the unit to cool.
2) Carefully remove lid and internal parts. Parts, coffee grounds, and remaining coffee may still be hot.
3) Wash the inside of the coffee urn and the parts with warm, soapy water. Rinse and dry. Do not dry the inside of the urn with a cloth, since lint may remain inside the urn. Do NOT immerse the body of the coffee urn in water.
4) Wipe the outside of the coffee urn with a damp cloth and dry with a towel. Store the coffee urn with the lid off.
5) To clean the serving spout, fill the coffee urn with some hot water and dishwasher detergent. Drain the hot water from the serving spout into a cup. Repeat this step with clean, hot water to remove any dishwasher detergent remaining in the serving spout.

ACP
HIGH PERFORMANCE HAS A NAME

Quick Start Reference Guide

Refer to Product Safety Manual for Safety Statements

Complete Owner's Manual available online

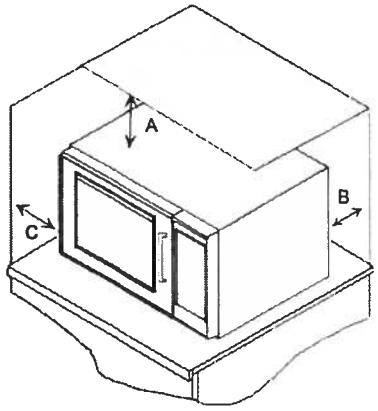

Oven Wall Clearances

A—For North American (UL/CSA) models, allow at least 3" (7.2 cm) of clearance around top of oven. For International (50 Hz) models, allow at least 12" (30 cm) of clearance around top of oven. Proper air flow around oven cools electrical components. With restricted air flow, oven may not operate properly and life of electrical parts is reduced.

B—Allow at least 3" (7.2 cm) between air discharge on back of oven and back wall.

C—Allow at least 3" (7.2 cm) of clearance around side of oven. One side of oven must be open.

6 Preprogrammed Pads

To cook food using preprogrammed cooking sequences:

1. Open oven door and place food in oven. Close door.
2. Press desired pad.
3. Oven begins to cook.
4. At end of cooking cycle oven beeps and shuts off.

X2 Programming

To change the cooking factor:

1. Open oven door.
2. Press and hold pad 1 for approximately 5 seconds.
3. Press pad to be reprogrammed.
4. Press the X2 pad.
5. Press a numbered pad to change the cooking factor.
   - Cooking factor can be set from 10% to 100%.
   - Default is 80%.
   - Pad 5 would change the cooking factor to 50%.
6. Press START pad to save changes.

So...how do I use it? (Electronic Control)

Manual Operation

To cook food using a specific entered time and power level:

1. Open oven door and place food in oven. Close door.
2. Press TIME ENTRY pad and enter cooking time.
3. Press a power level pad to change power level if desired (some models).
   - **COOK LEVEL** displays with the power setting.
4. If stage cooking is desired, press TIME ENTRY pad and repeat steps 2 through 4.
5. Press START pad.
6. At end of cooking cycle oven beeps and shuts off.

Programming Items

1. Open oven door.
2. Press and hold pad 1 for approximately 5 seconds.
3. Press pad to be reprogrammed.
4. Enter cooking time by using the number pads.
5. Press a power level 50% pad to change power level if desired.
6. If stage cooking is desired, press TIME ENTRY pad.
   - Display briefly shows the stage number.
   - Display changes to cook time and power level for the next stage.
7. Enter cook time and power level as in steps 4 and 5 (some models).
   - To enter another cooking stage for that pad, press TIME ENTRY pad again.
   - Up to four different stages can be programmed (some models).
8. Press START pad to set new programming changes to the pad.

NOTE: To discard changes, press STOP/RESET pad or close oven door.

X2 Pad

1. Open oven door and place food in oven. Close door.
2. Press X2 pad.
3. Press desired preprogrammed pad or pad sequence.
4. Oven begins cooking. Displayed cooking time is the total of original cooking time and added X2 time.

The switching operation of this microwave oven can cause voltage fluctuations on the supply line. The operation of this oven under unfavorable voltage supply conditions can have adverse effects. This device is intended for the connection to a power supply system with a maximum permissible system impedance Zmax of **0.2 Ohms** at the interface point of the user's supply. The user has to ensure that this device is connected only to a power supply system which fulfills the requirement above. If necessary, the user can ask the public power supply company for the system impedance at the interface point.